Technical Specifications:

1. Operating Temperature: −40° C～+125° C.
2. Current Rating: 500 A (MAX).
3. Operating Voltage: 1500 VDC.
   500VDC(HVIL).
<S/C>▲4. Dielectric Withstanding Voltage: 4000 VAC & 6000 VDC.
   500 VAC (HVIL).
<S/C>▲5. Protection Class: IP68 & IP6K9K;
   IPXXB & IPXXD.
▲6. Insulation ressitance: 2GΩ.
   550MΩ (HVIL).
▲7. Shielding (The shielding function is limited to shielding products)
8. Mating Cycle: 100 Min.
9. Automatic Secondary Lock.
10. HVIL (HVIL functionality is limited to HVIL products)
11. Matching plug: PRC18−501/PRC28−501

Ordering Information

PRC 00 X −50 1 −10 D 10 − Y01

Key position & Color:	HVIL:	Hold Type:	Hole Size:	Salt spray requirements:
X, Orange Y, Black U, Yellow V, Green W, Red	0, Without HVIL 1, With HVIL	D, Through Hole M, Screw hole H, Slotted hole	6 : Match M6 screw 8 : Match M8 screw 10: Match M10 screw	Default: 96 hour Y01: 336 hour Y02: 480 hour

REVISIONS					
REV	ECN#	DESCRIPTION	REV.BY	APPR.BY	DATE
A1	- -	Initial release	W.FS	M.D	2023/6/2
B	ECN-2024-001	Change parameters	W.FS	M.D	2024/1/22

Customer Drawing

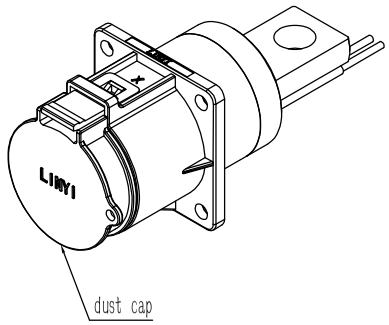

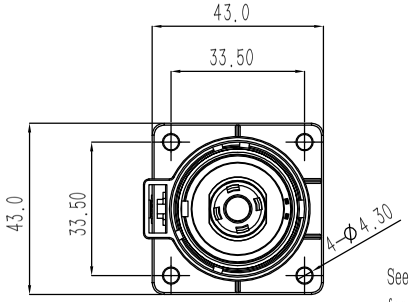

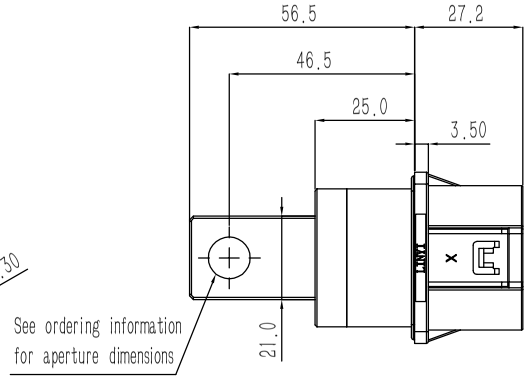

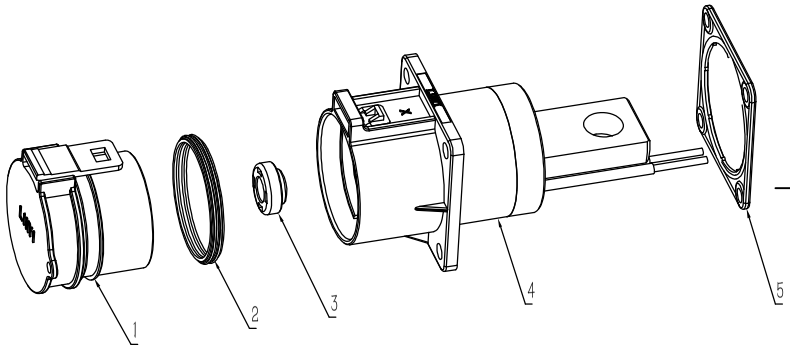

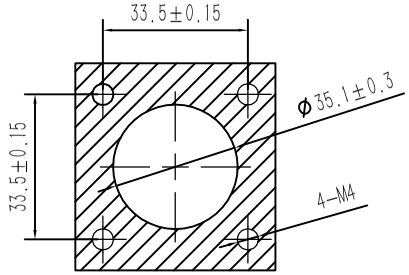

Panel Size

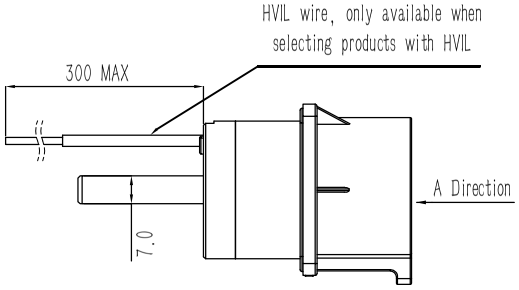

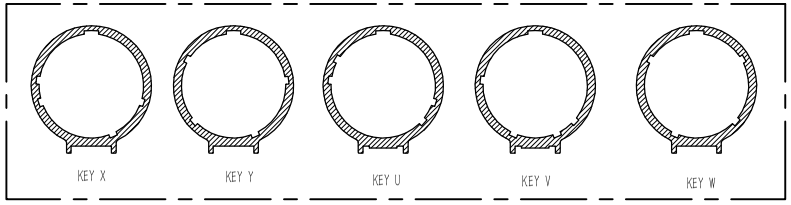

Schematic diagram of A−direction key position

ITEM	DESCRIPTION	TEXTURE	Qty
5	Socket seal	Flame retardant fluororubber, black	1
4	Socket body	/	1
3	Anti touch plug	PA	1
2	Dust cover seal ring	Flame retardant silicone rubber, red	1
1	Dust cap	PP	1

BALE		Chengdu City Bale New Energy Technology Co. Ltd			
		WEIGHT	MATERIAL: /		PART NAME: PRC 500A RECEPTACLE
SIGNATURE		DATE	SHEET	No tolerance(mm):	CUST P/N: SEE TABLE
DRAWN	W.FS		1/2	x.: ±1.0 x..: ±0.5 x...: ±0.2	
CHECKED	M.D		ANGLE OF VIEW	Angle: ±2°	DWG NO: PRC00-501-10
APPROVAL	M.D				

THE COPYRIGHT BELONGS TO BALE

Customer Drawing

REVISIONS					
REV	ECN#	DESCRIPTION	REV.BY	APPR.BY	DATE
A1	- -	Initial release	W.FS	M.D	2023/6/2
B	ECN-2024-001	Change parameters	W.FS	M.D	2024/1/22

Receptacle With HVIL:

P/N	Description
PRC00X-501-10M6	500A RCPT KEY X Busbar M6 WITH HVIL
PRC00Y-501-10M6	500A RCPT KEY Y Busbar M6 WITH HVIL
PRC00U-501-10M6	500A RCPT KEY U Busbar M6 WITH HVIL
PRC00V-501-10M6	500A RCPT KEY V Busbar M6 WITH HVIL
PRC00W-501-10M6	500A RCPT KEY W Busbar M6 WITH HVIL
PRC00X-501-10M8	500A RCPT KEY X Busbar M8 WITH HVIL
PRC00Y-501-10M8	500A RCPT KEY Y Busbar M8 WITH HVIL
PRC00U-501-10M8	500A RCPT KEY U Busbar M8 WITH HVIL
PRC00V-501-10M8	500A RCPT KEY V Busbar M8 WITH HVIL
PRC00W-501-10M8	500A RCPT KEY W Busbar M8 WITH HVIL
PRC00X-501-10M10	500A RCPT KEY X Busbar M10 WITH HVIL
PRC00Y-501-10M10	500A RCPT KEY Y Busbar M10 WITH HVIL
PRC00U-501-10M10	500A RCPT KEY U Busbar M10 WITH HVIL
PRC00V-501-10M10	500A RCPT KEY V Busbar M10 WITH HVIL
PRC00W-501-10M10	500A RCPT KEY W Busbar M10 WITH HVIL

P/N	Description
PRC00X-501-10D6	500A RCPT KEY X Busbar D6 WITH HVIL
PRC00Y-501-10D6	500A RCPT KEY Y Busbar D6 WITH HVIL
PRC00U-501-10D6	500A RCPT KEY U Busbar D6 WITH HVIL
PRC00V-501-10D6	500A RCPT KEY V Busbar D6 WITH HVIL
PRC00W-501-10D6	500A RCPT KEY W Busbar D6 WITH HVIL
PRC00X-501-10D8	500A RCPT KEY X Busbar D8 WITH HVIL
PRC00Y-501-10D8	500A RCPT KEY Y Busbar D8 WITH HVIL
PRC00U-501-10D8	500A RCPT KEY U Busbar D8 WITH HVIL
PRC00V-501-10D8	500A RCPT KEY V Busbar D8 WITH HVIL
PRC00W-501-10D8	500A RCPT KEY W Busbar D8 WITH HVIL
PRC00X-501-10D10	500A RCPT KEY X Busbar D10 WITH HVIL
PRC00Y-501-10D10	500A RCPT KEY Y Busbar D10 WITH HVIL
PRC00U-501-10D10	500A RCPT KEY U Busbar D10 WITH HVIL
PRC00V-501-10D10	500A RCPT KEY V Busbar D10 WITH HVIL
PRC00W-501-10D10	500A RCPT KEY W Busbar D10 WITH HVIL

P/N	Description
PRC00X-501-10H6	500A RCPT KEY X Busbar H6 WITH HVIL
PRC00Y-501-10H6	500A RCPT KEY Y Busbar H6 WITH HVIL
PRC00U-501-10H6	500A RCPT KEY U Busbar H6 WITH HVIL
PRC00V-501-10H6	500A RCPT KEY V Busbar H6 WITH HVIL
PRC00W-501-10H6	500A RCPT KEY W Busbar H6 WITH HVIL
PRC00X-501-10H8	500A RCPT KEY X Busbar H8 WITH HVIL
PRC00Y-501-10H8	500A RCPT KEY Y Busbar H8 WITH HVIL
PRC00U-501-10H8	500A RCPT KEY U Busbar H8 WITH HVIL
PRC00V-501-10H8	500A RCPT KEY V Busbar H8 WITH HVIL
PRC00W-501-10H8	500A RCPT KEY W Busbar H8 WITH HVIL
PRC00X-501-10H10	500A RCPT KEY X Busbar H10 WITH HVIL
PRC00Y-501-10H10	500A RCPT KEY Y Busbar H10 WITH HVIL
PRC00U-501-10H10	500A RCPT KEY U Busbar H10 WITH HVIL
PRC00V-501-10H10	500A RCPT KEY V Busbar H10 WITH HVIL
PRC00W-501-10H10	500A RCPT KEY W Busbar H10 WITH HVIL

Receptacle Without HVIL:

P/N	Description
PRC00X-500-10M6	500A RCPT KEY X Busbar M6
PRC00Y-500-10M6	500A RCPT KEY Y Busbar M6
PRC00U-500-10M6	500A RCPT KEY U Busbar M6
PRC00V-500-10M6	500A RCPT KEY V Busbar M6
PRC00W-500-10M6	500A RCPT KEY W Busbar M6
PRC00X-500-10M8	500A RCPT KEY X Busbar M8
PRC00Y-500-10M8	500A RCPT KEY Y Busbar M8
PRC00U-500-10M8	500A RCPT KEY U Busbar M8
PRC00V-500-10M8	500A RCPT KEY V Busbar M8
PRC00W-500-10M8	500A RCPT KEY W Busbar M8
PRC00X-500-10M10	500A RCPT KEY X Busbar M10
PRC00Y-500-10M10	500A RCPT KEY Y Busbar M10
PRC00U-500-10M10	500A RCPT KEY U Busbar M10
PRC00V-500-10M10	500A RCPT KEY V Busbar M10
PRC00W-500-10M10	500A RCPT KEY W Busbar M10

P/N	Description
PRC00X-500-10D6	500A RCPT KEY X Busbar D6
PRC00Y-500-10D6	500A RCPT KEY Y Busbar D6
PRC00U-500-10D6	500A RCPT KEY U Busbar D6
PRC00V-500-10D6	500A RCPT KEY V Busbar D6
PRC00W-500-10D6	500A RCPT KEY W Busbar D6
PRC00X-500-10D8	500A RCPT KEY X Busbar D8
PRC00Y-500-10D8	500A RCPT KEY Y Busbar D8
PRC00U-500-10D8	500A RCPT KEY U Busbar D8
PRC00V-500-10D8	500A RCPT KEY V Busbar D8
PRC00W-500-10D8	500A RCPT KEY W Busbar D8
PRC00X-500-10D10	500A RCPT KEY X Busbar D10
PRC00Y-500-10D10	500A RCPT KEY Y Busbar D10
PRC00U-500-10D10	500A RCPT KEY U Busbar D10
PRC00V-500-10D10	500A RCPT KEY V Busbar D10
PRC00W-500-10D10	500A RCPT KEY W Busbar D10

P/N	Description
PRC00X-500-10H6	500A RCPT KEY X Busbar H6
PRC00Y-500-10H6	500A RCPT KEY Y Busbar H6
PRC00U-500-10H6	500A RCPT KEY U Busbar H6
PRC00V-500-10H6	500A RCPT KEY V Busbar H6
PRC00W-500-10H6	500A RCPT KEY W Busbar H6
PRC00X-500-10H8	500A RCPT KEY X Busbar H8
PRC00Y-500-10H8	500A RCPT KEY Y Busbar H8
PRC00U-500-10H8	500A RCPT KEY U Busbar H8
PRC00V-500-10H8	500A RCPT KEY V Busbar H8
PRC00W-500-10H8	500A RCPT KEY W Busbar H8
PRC00X-500-10H10	500A RCPT KEY X Busbar H10
PRC00Y-500-10H10	500A RCPT KEY Y Busbar H10
PRC00U-500-10H10	500A RCPT KEY U Busbar H10
PRC00V-500-10H10	500A RCPT KEY V Busbar H10
PRC00W-500-10H10	500A RCPT KEY W Busbar H10

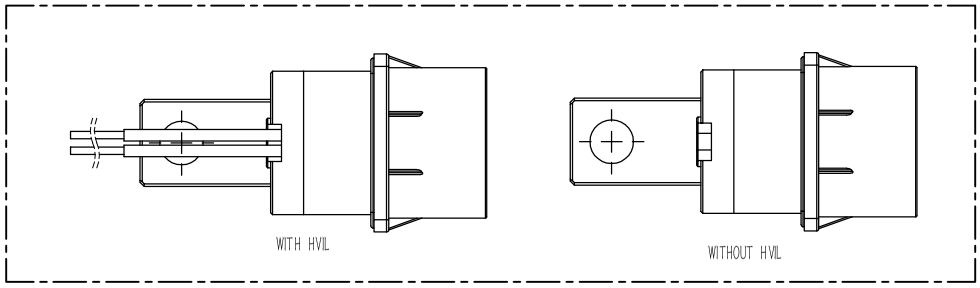

BALE		Chengdu City Bale New Energy Technology Co. Ltd			
		WEIGHT	MATERIAL: /		PART NAME: PRC 500A RECEPTACLE
SIGNATURE		DATE	SHEET	No tolerance(mm):	CUST P/N: SEE TABLE
DRAWN	W.FS		2/2	x.: ±1.0 x..: ±0.5 x...: ±0.2	
CHECKED	M.D		ANGLE OF VIEW	Angle: ±2°	DWG NO: PRC00-501-10
APPROVAL	M.D				

THE COPYRIGHT BELONGS TO BALE